unisec*

the new Gurley Coincidence Reading System

W. & L. E. GURLEY TROY, N. Y.

INDUSTRIAL DIVISION

*Trademark

High-precision angular measuring device (highest possible outside of an optical reading theodolite—reads directly to one second) ● May be attached to a shaft of any rotatable device, where highly precise positioning is desirable ● Available as a completely assembled unit or as separate components—unisec and glass circle

UNISEC Assembly No. 5706-A

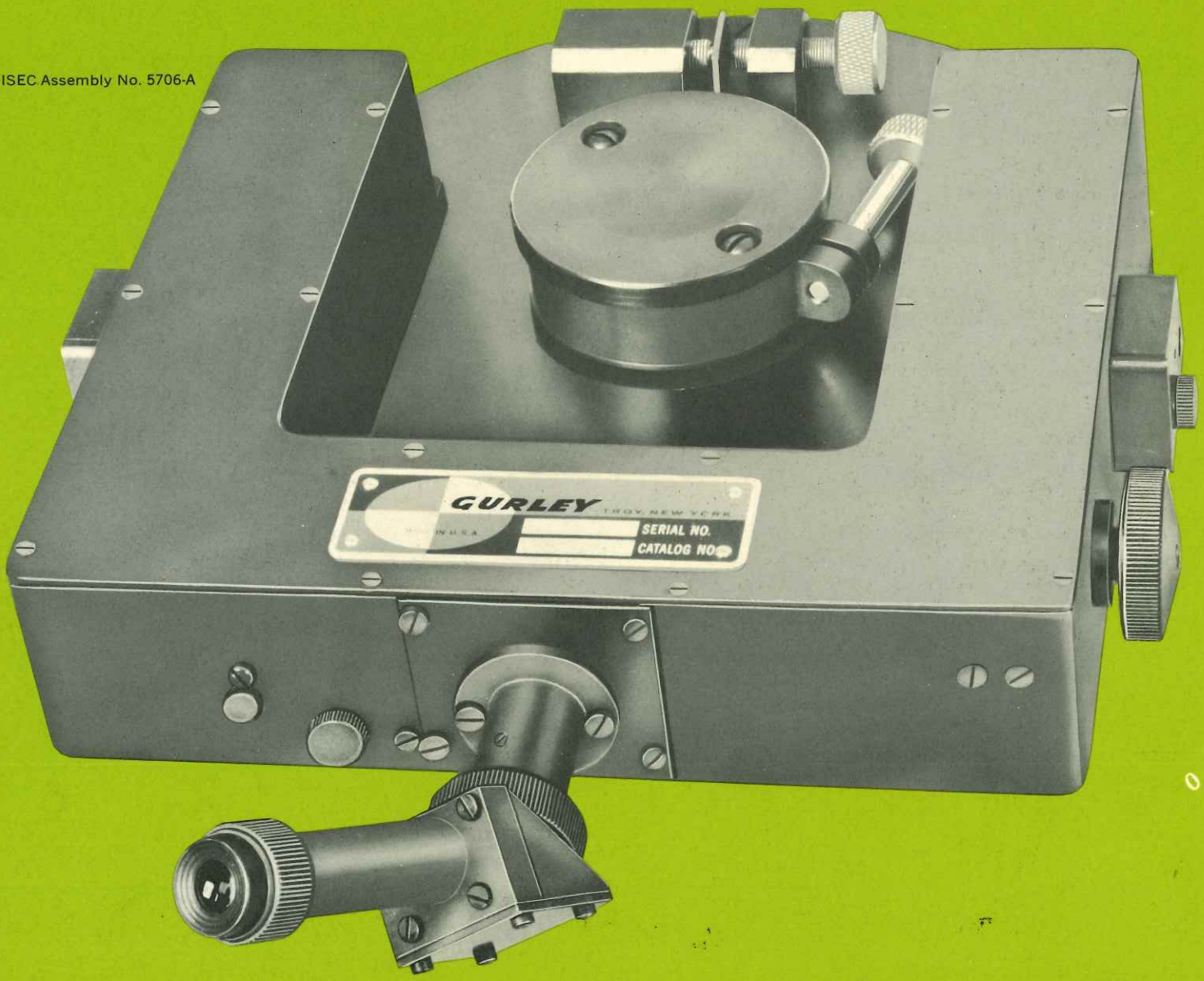

THE COINCIDENCE READING PRINCIPLE For many years it has been recognized that "if two sides of a circle are read, eccentric errors are eliminated". Since there is little or no published geometric or mathematical proof of such a statement, it might be well to introduce one method of "proof".

● If we assume we have a perfect circle rotating about a perfect point, only one index would be needed to read the circle, such as either Index A or Index B in **Figure 1.**

● If this perfect circle is rotated in an eccentric manner, the path of the true center of the circle would be as indicated by the dotted circle in **Figure 2.** It is obvious that one index gives an erroneous reading, except in one position of the circle.

● If this eccentrically mounted circle is rotated through a true 90° angle, it would appear as in **Figure 3.** Index A would indicate that the angle of rotation was **greater** than 90° by the amount of angle "A", and Index B would indicate that the angle was **less** than 90° by the amount of angle "B".

● Since angle A=angle B, the averaging of readings from Index A and Index B would give the true angle of rotation. Let us assume that Angle A=Angle B=10°. One side of the circle would read 260°, and the other side would read 100°. If 180° is subtracted from 260°, to relate this side of the circle to a comparable reading, we obtain 80°, which is to be compared with 100°. The mean of these two readings, 80° plus 100° divided by 2 gives the true angular displacement of the circle 90°. Of course the figures illustrated are greatly exaggerated, but the basic principle applies to the eccentric errors of seconds of arc as well as to the degrees of arc shown.

● It might be well to illustrate the minuteness of a second of arc. It is a circle divided into 1,296,000 parts. This would mean that if graduations were placed around the circumference of a circle at intervals of 1,000th of an inch, the circle would have to be almost 35 feet in diameter.

THE GURLEY UNISEC W. & L. E. Gurley has produced a device which will read a circle 5 inches in diameter to 1 second of arc directly.

● Using the principle of reading both sides of a circle at once, all eccentric errors are removed. The circle itself is graduated in intervals of 10 minutes of arc, and therefore contains 2,160 graduations. These 10 minute intervals are sub-divided by a micrometer scale which is attached to a deviating prism. The scale is divided into 300 equal parts or the equivalent of 5 minutes of arc. The deviating prism shifts the angle of a beam of light from one side of the circle optical train. Schematically, this system is

DIVISION 7
NOV 24 1958
U. S. PATENT OFFICE

DIVIS
NOV 24 1961
U. S. PATENT OFFICE

FIGURE 1

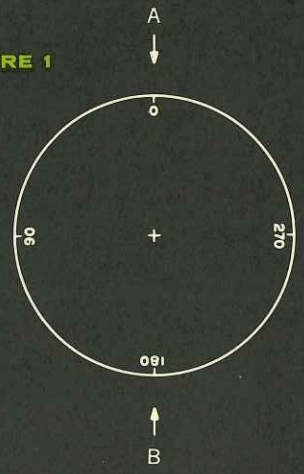

FIGURE 2

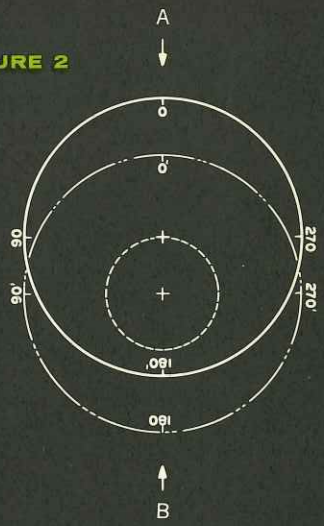

FIGURE 3

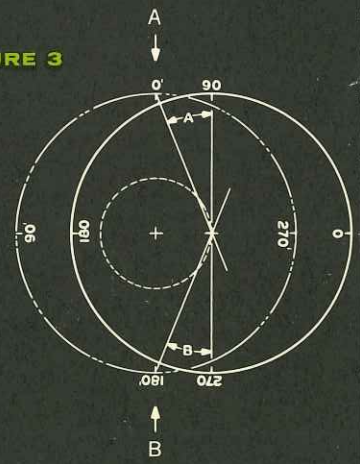

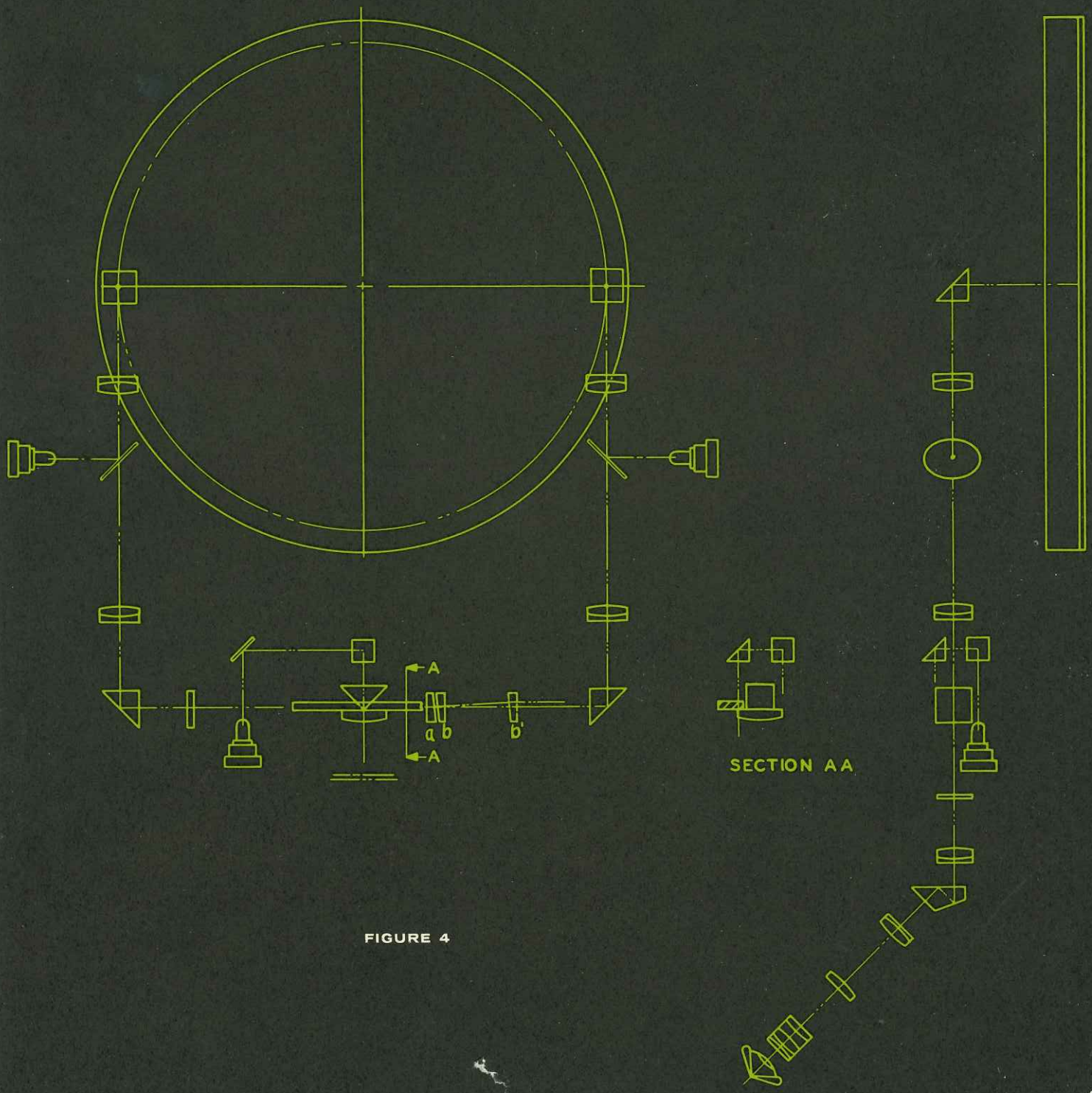

FIGURE 4

shown in **Figure 4.** When prism a and prism b are "married", there is no deviation of the beam of light and the circle readings might appear as in **Figure 5.** If now the prism b and consequently the attached scale are moved, the deviated beam of light will seemingly change the position of the circle graduations and opposite sides of the circle graduations can be "brought into coincidence", as shown in **Figure 6.** In this situation, the deviating prism might appear in the schematic drawing **Figure 4** as at b'.

● If the scale attached to the prism is now read, it shows the amount of movement necessary to bring lines into coincidence or 1/300th of the 10 minutes of arc. Please note that to divide 10 minutes of arc truly, a scale would have to contain 600 graduations. Since a scale this long would be extremely difficult to manufacture (and also read), the Gurley reading system has optically doubled the size of the 300 line scale accomplishing the same results as if a 600 line scale had been used. The only precaution necessary in reading the scale is to observe whether the apparent movement of the circle graduations when brought into coincidence had been **less** than or **greater** than 5 minutes of arc. This is easily observed by noticing the Arrow Head inserted in center of field of view.

HOW TO READ UNISEC Let us suppose the circle is attached to a sighting device which is sighted at some base point. It is desired to turn the sighting device to an object and to be able to measure the amount of angle between the base point and the object. When the base point is sighted the scale windows might appear as in **Figure 5.** First of all, note the Arrow Head. THIS IS FOR ESTIMATION ONLY. THE ARROW HEAD IS FOR NO OTHER PURPOSE. IT IS NOT A READING INDEX.

● The graduations are now brought into coincidence and would appear as in **Figure 6.** In this case, we note that the initial reading will be 00° 10′ plus some increment less than 5′. This increment is now measured in the smaller window (the image of the micrometer scale). The upper row of figures shows a series of 3's (measuring 3 minutes), so this then is added to the initial reading of 00° 10′ giving 00° 13′. The lower figures are now read and the reading of 24.3 is obtained. Since these are seconds, they are added to the above reading, so the initial reading on the instrument is now 00°, 13′ 24.3″ (**Figure 6**).

● If the sighting device is now rotated and sighted at the object, and no other adjustment is made, the scales might read as shown in **Figure 7.** Note that none of the lines are in coincidence. By moving the deviating prism, the lines are brought into coincidence and the scales would appear as in **Figure 8.** Once again we note the Arrow Head, AND ESTIMATE THE READING, 48° 15′ PLUS SOME INCREMENT LESS THAN 5′. By reading the upper row of figures we find that only 2′ plus are used, so we now know our reading will be 48° 17′ plus the number of seconds shown in the lower row of figures in the small window, which in this case is 21.6 seconds. Our new reading is then 48° 17′ 21.6″. The full movement of the sighting device is then 48° 17′ 21.6″, minus 00° 13′ 24.3″ (our initial reading), or 48° 03′ 57.3″.

● In operation should it be desired to "zero" the instrument, locking screw (A, **Figure 9**) can be released and capstanhead screw (B, **Figure 9**) rotated by a pin to bring image to a zero start position.

● If it is found that the image of the two sides of the circle are not clearly defined, proper focusing can be accomplished by first removing the Port Covers (C & D, **Figure 9**). A locking screw can be released by using a small screwdriver, and then through the use of an adjusting pin in the slot, the focusing lens can be brought into proper focus, by sliding the lens mount.

● Any other adjustments should be accomplished by W. & L. E. Gurley. The units are sealed to insure perfect adjustment when the instruments leave the Factory and to insure that the instrument has not been damaged by inexperienced repairmen.

FIGURE 5

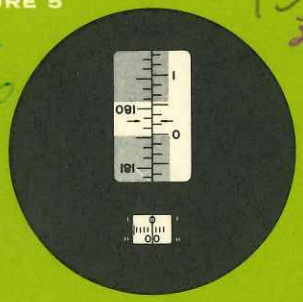

FIGURE 6

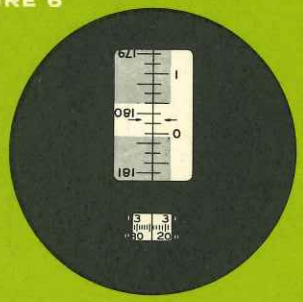

FIGURE 7

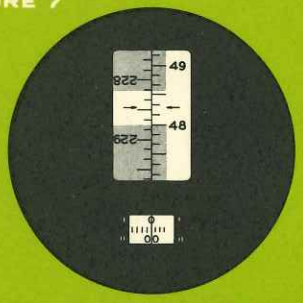

FIGURE 8

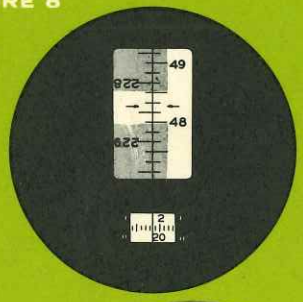

Outline Dimensions of No. 5706 UNISEC
and No. 5206 Precision Circle.

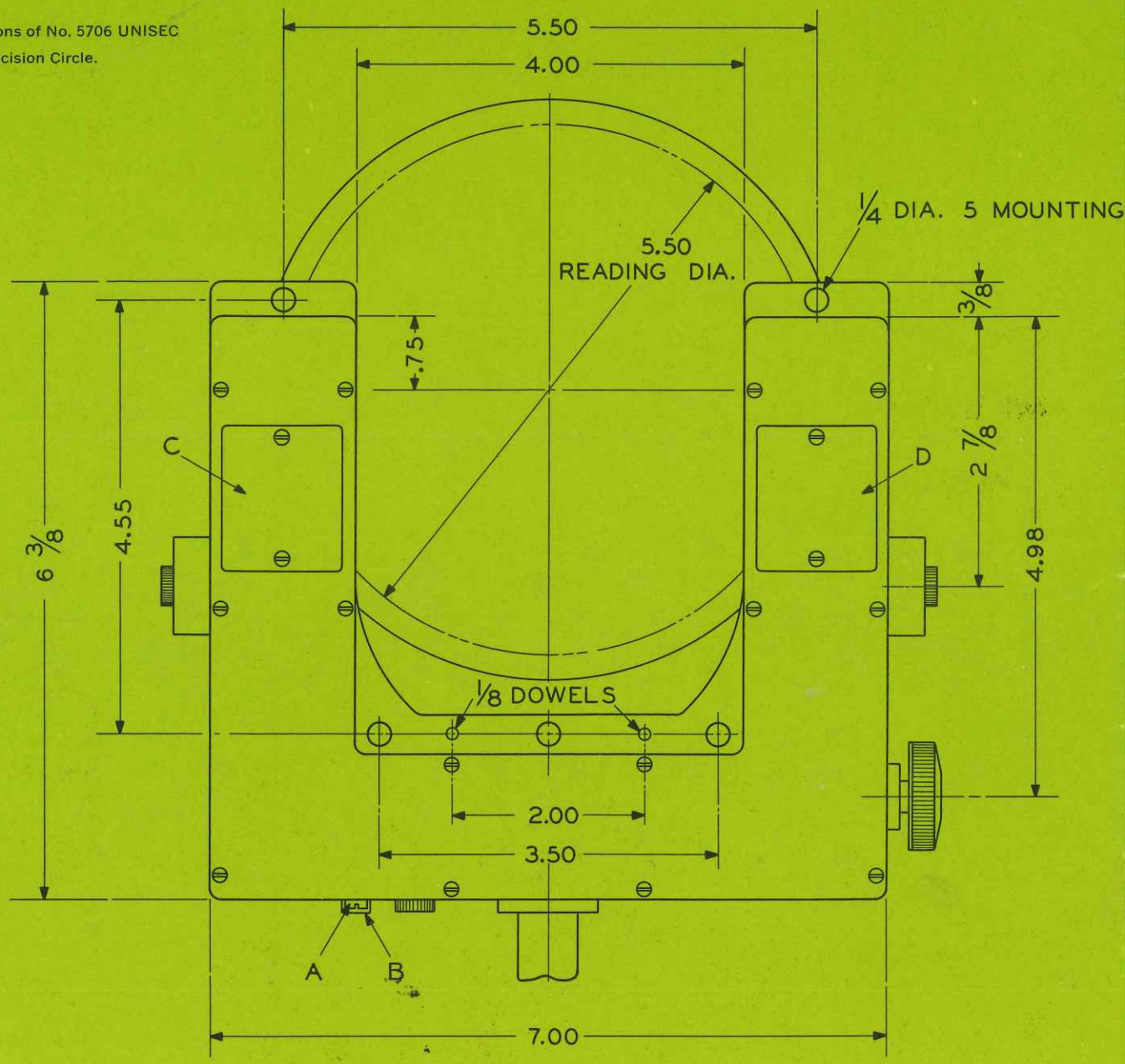

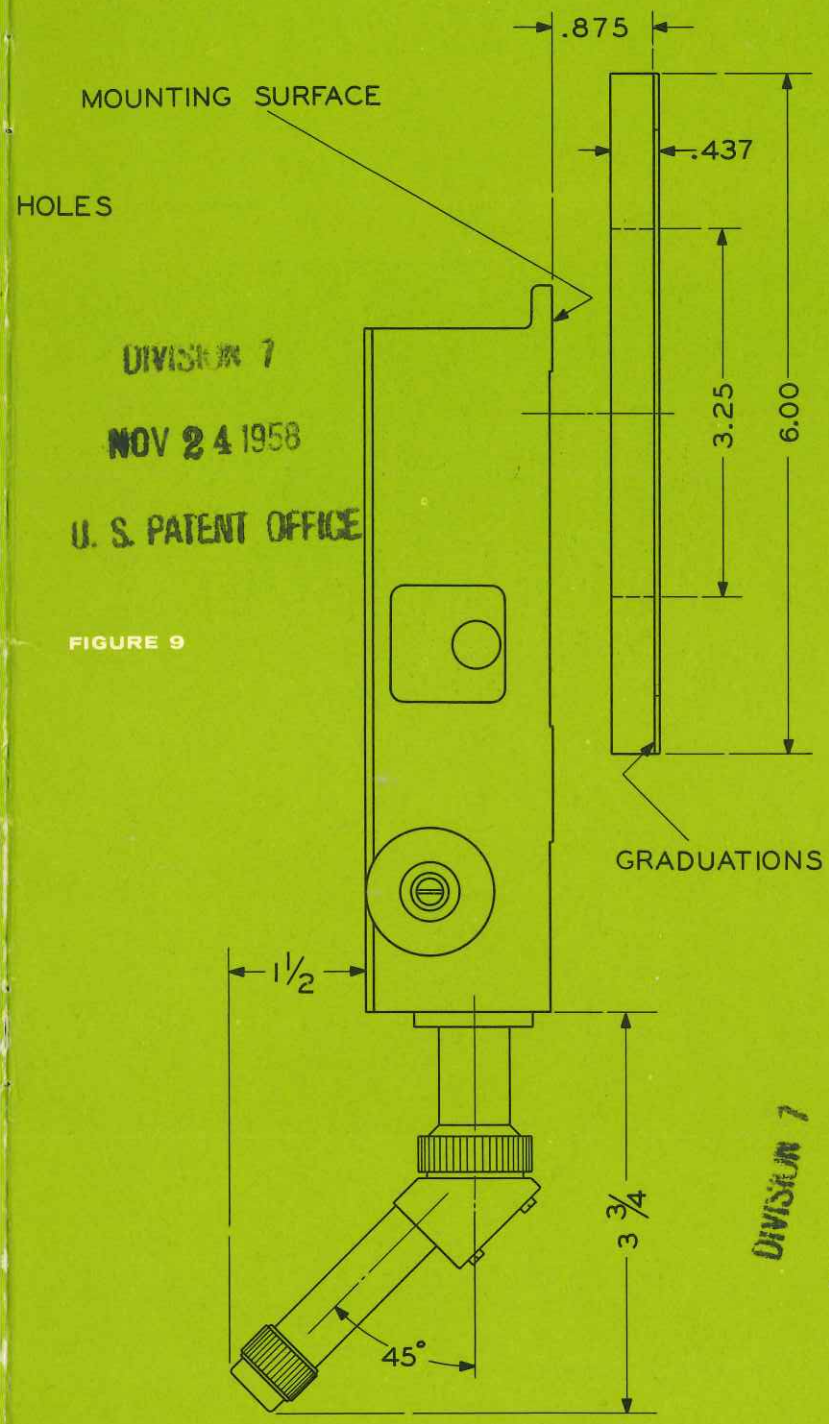

DIVISION 7
NOV 24 1958
U. S. PATENT OFFICE

FIGURE 9

GENERAL INFORMATION Figure 9 shows an outline dimensioned drawing of the UNISEC and a glass circle so that users may be able to locate mounting holes for the housing, and manufacture adequate hubs for the glass circle. The precision glass circles are made from highly polished flat optical glass. They are coated with a reflecting material in which the graduations and figures appear.

● The standard instrument comes complete with a swiveling eyepiece which rotates the full 360°. Special eyepieces can be provided.

● Special Coincidence Reading Systems using larger circles and larger housings are available on order. Projection systems are also available on order where the image of the circle and micrometer scale are projected on a screen at greater magnification, thereby eliminating the necessity for observation of the graduations through a microscope. A practical application of such devices is in large precision milling machine tables.

● Cat. No. 7206 — PRECISION DIVIDED GLASS CIRCLE

For use with No. 7506 UNISEC. Polished optically flat glass circle of crown glass. It is coated with metallic reflecting surface bearing graduations and figures; provided with thin protective cover glass. Net weight 3/4 lb. Shipping weight 2 lbs.

● Cat. No. 7506—UNISEC READING SYSTEM ONLY

Consisting of optical coincidence reading system with reading microscope in aluminum housing. Reading directly to one second of arc. Finished in black anodize. Requires three volts A.C. or D.C. for illumination. Net weight 3 lb., 9 oz. Shipping weight domestic 8 lbs.

● Cat. No. 7506-A — UNISEC ASSEMBLY

As illustrated on page 2. Reading directly to one second of arc. In aluminum alloy housing finished in black anodize. Requires three volts A.C. or D.C. for illumination. Net weight 10 lb. Shipping weight domestic 18 lb.

DIVISION 7
NOV 24 1958
U. S. PATENT OFFICE

UNISEC is protected under U.S. Patent No. 2363877

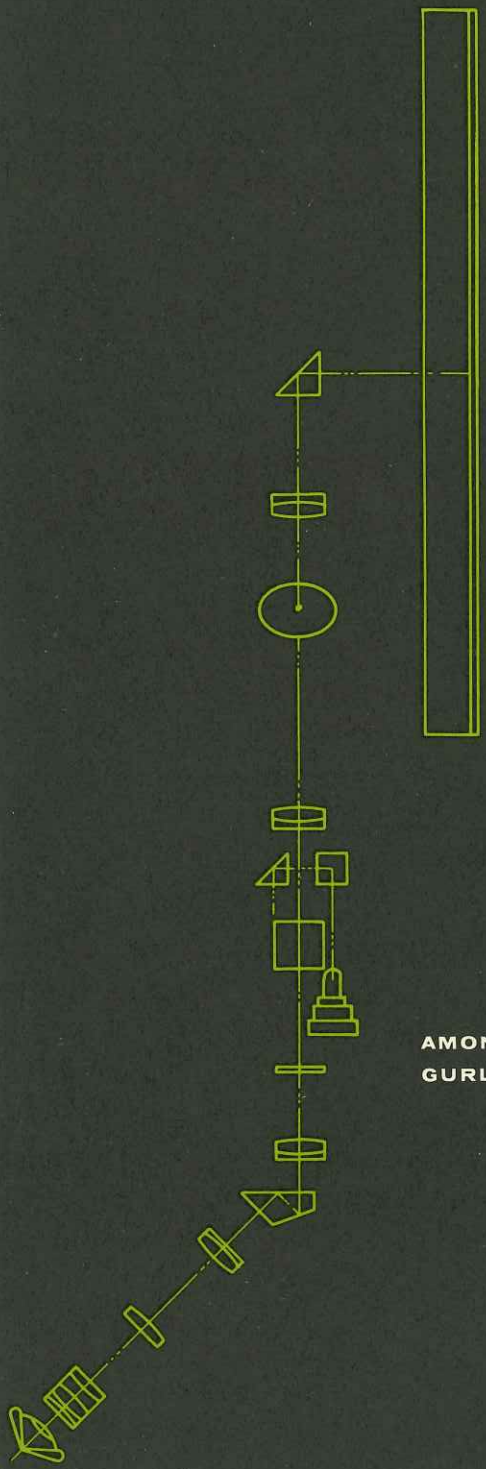

UNISEC IS A GURLEY DEVELOPMENT FROM 113 YEARS' EXPERIENCE IN THE OPTICAL FIELD

AMONG OTHER GURLEY PRODUCTS AND FACILITIES

- Engineering and Surveying Instruments
- Hydraulic Engineering Instruments
- Standard Precision Weights and Measures
- Paper and Textile Testing Instruments
- Meteorological Instruments
- Precision Dividing
- Precision Patterns on glass or metal
- Photoelectric Analogue-Digital Convertors

PRINTED IN U.S.A.
5M 9/57